NOTES:

1. For Notes see Drg No SD/5/16.

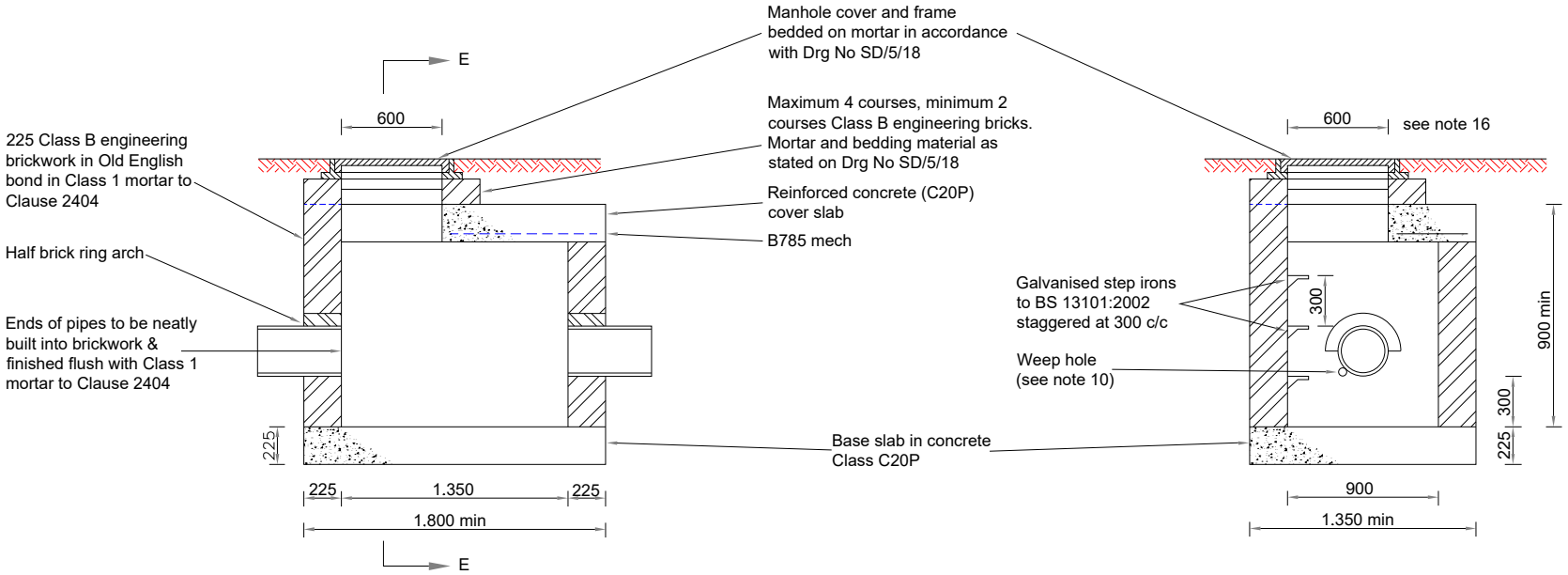

SECTION D - D

SECTION E - E

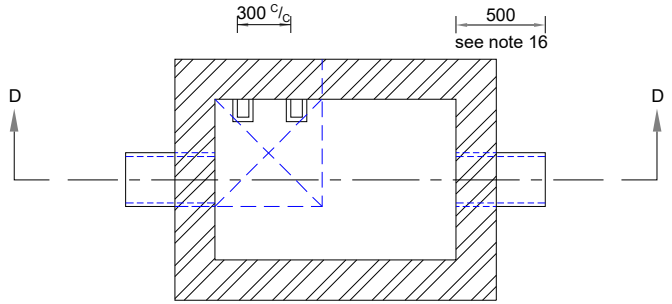

PLAN

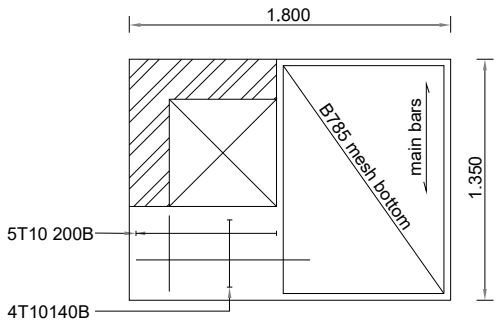

COVER SLAB REINFORCEMENT

TYPICAL DETAILS OF BRICK CATCHPIT

(Pipe diameter 100 - 450, depth to top of base slab 1.3 - 3.0) see Note 9

Rev.	Description	Drawn	Ch'kd	Auth	Date

in partnership with Nottinghamshire County Council

www.viaem.co.uk Tel 0115 804 2100
Bilsthorpe Depot, Bilsthorpe Business Park, Bilsthorpe, Nottinghamshire, NG22 8ST

Project: Highway Construction Details		Drawn: JLS	Date: 11/06/2020
Status	Project No. DRAINAGE	Ch'kd: JD	Date: 25/06/20
Drawing Title: Catchpit Group CP1 - Brick Catchpits		Auth: JJP	Traced: JLS
Drawing No. SD/5/20		Rev. 0	Scale: N.T.S @A4

A4